□□□□□□□□□□□□□□□□□□

□□□□□□□□□□□□□□□□□□□□□□□□□□□
□□□□□□□□□□□□□□□□□□□□
□□□□□□□□□□□□□□□□□: BEST-507 250G Solder Solder
□□□□: □□□□□□□□ / □□□□□□□□□□□ / □□□□□□ / □□□□□□□□□□□□□□□□□□□□□□□ SMD IC □□□ BGA □□□□□□□ IC,
□□□□□□□□□□□□□□□□□□□□□□□□□□□□□□□ □□□□□□□□□□□□□□□□□□□□□□□□□□□□□□□.

Product Usage

MODEL	BST-508
SHELF LIFE	6 months
INGREDIENT	Sn63/Pb37
WEIGHT	500g
MELTING POINT	183℃

Having a large insulation resistance does not corrode the PCB, and the requirements for no-cleaning can be achieved.

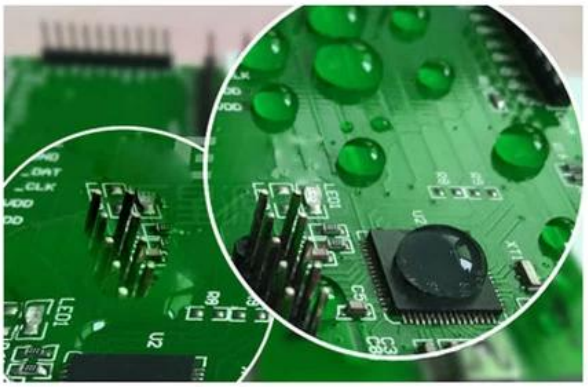

High impedance, full and bright solder, low residue

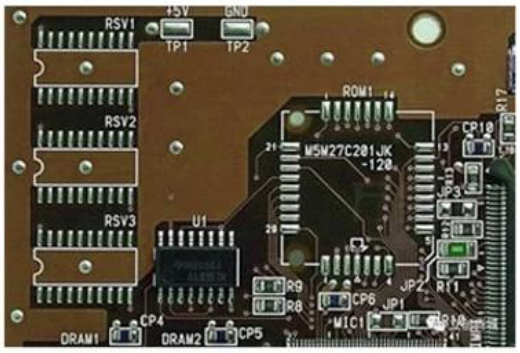

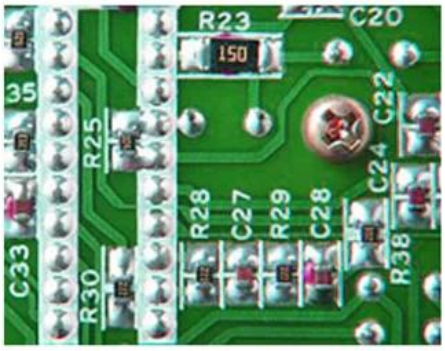

Welding requirements for a wide range of products

TESTING EFFECT

UNIFORM SOLDER JOINT

LOW TEMPERATURE MELTING POINT

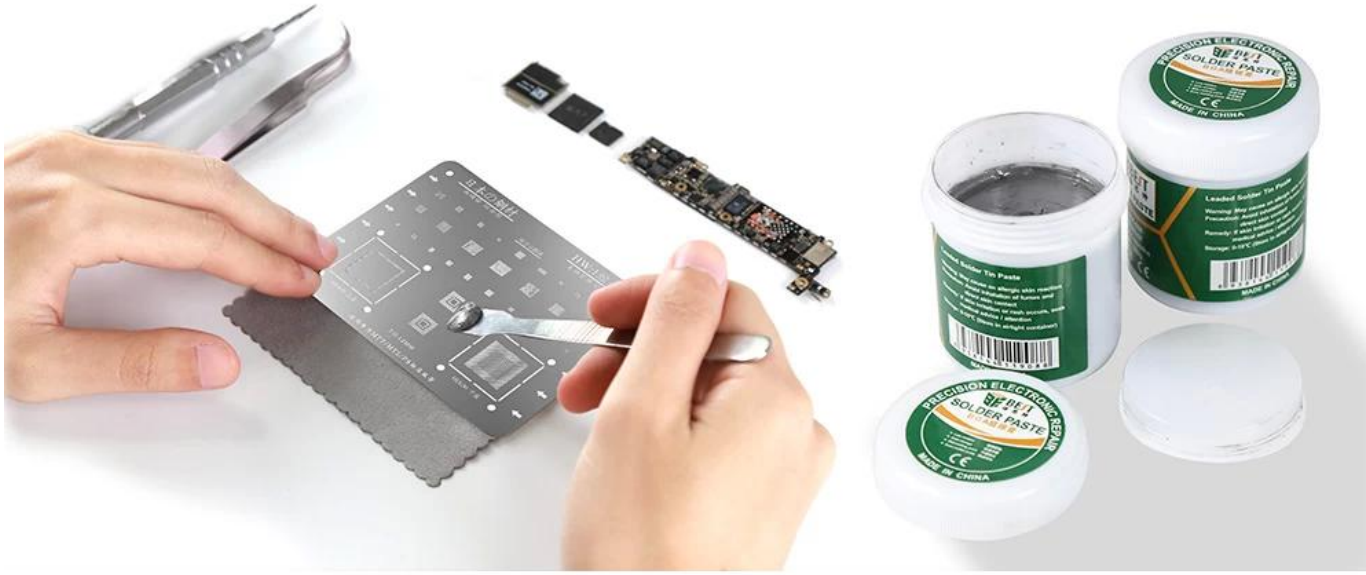

PRODUCT SIZE