MOBILE PHONE REPAIR DEDICATED

MOBILE PHONE GLASS BLASTING TOOL

STRENGTH ADJUSTMENT | NON-SLIP HANDLE | EASY AND LABOR-SAVING

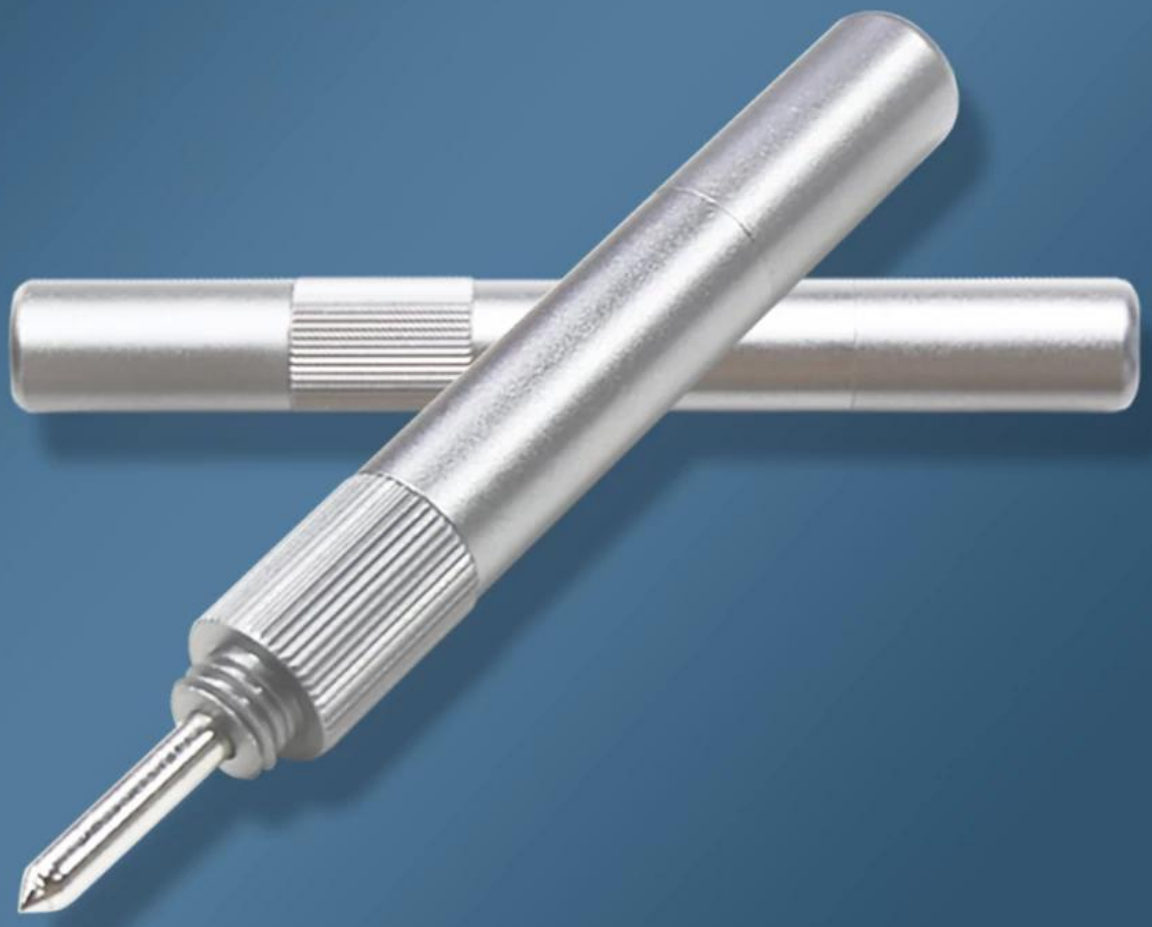

PRODUCT PARAMETERS

GLASS
BLASTING TOOL

PRODUCT NAME	mobile phone glass blasting tool
PRODUCT MODEL	BST-896
PRODUCT NET WEIGHT	47.7g
PRODUCT GROSS WEIGHT	53.6g
PRODUCT SIZE	115mm×14mm×14mm
PACKAGE SIZE	133mm X 17mm×17mm

▼PRODUCT ADVANTAGES

The strength can be adjusted, removing the glass back cover of the mobile phone and the camera will not damage the mobile phone accessories, and you will not worry about the back cover being broken down by excessive force. The handle has a non-slip feature for safety and comfort.

NON-SLIP HANDLE

GLASS
BLASTING TOOL

Small and portable, sandblasted surface
environmentally friendly and wear-resistant
Engraved pattern, safe and anti-skid

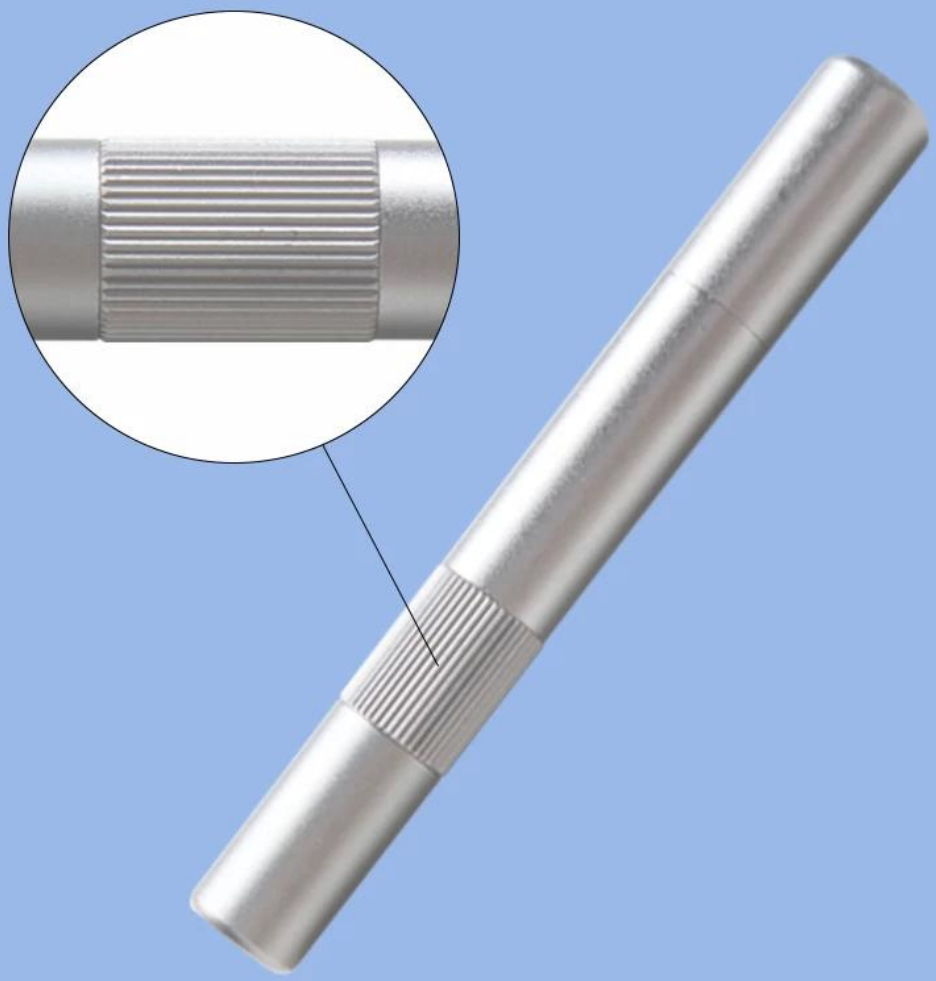

EASY AND LABOR-SAVING

GLASS
BLASTING TOOL

Break it down with one pressure, no effort required
Spring press type, safe and not hurting people
don't worry about excessive force

01

ERGONOMIC DESIGN

Small and portable
Sandblasted surface, excellent hand feel
Rounded corners for a comfortable grip

02

SAFETY COVER DESIGN

When not in use, cover the protective cove
to prevent pen sharps
sharp accidental injury

PRODUCT SIZE

GLASS
BLASTING TOOL