□□ □□

• 100 % □□□ □□□!
• □□ □□□□ □□□ □□□□□□ □□ □□□□□.
• □□□ □□□□ □□ □□□□ □□□ □ □□□ □□□ □□ □ □ □□□ □□ □□□ □□ □ □□□□□.
• □□ □□□ □□□□□ □□□ □□□ □□□ □□□□□ □□□□ □□□□.
• □□□, PC □□ □ □□ □□□ □□ □ □□ □□□ □□□ □□□□□.

□□□

□□ : BST-706
□□ : 138 ℃
□□ : 500g
□□ : Sn99 %, Cu0.7 %, Ag0.3 %

Product Usage

MODEL	BST-706
SHELF LIFE	6 months
INGREDIENT	Sn42/Bi58
WEIGHT	500g
MELTING POINT	138℃

Having a large insulation resistance does not corrode the PCB, and the requirements for no-cleaning can be achieved.

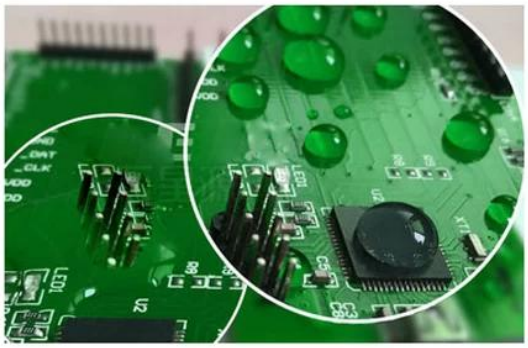

High impedance, full and bright solder, low residue

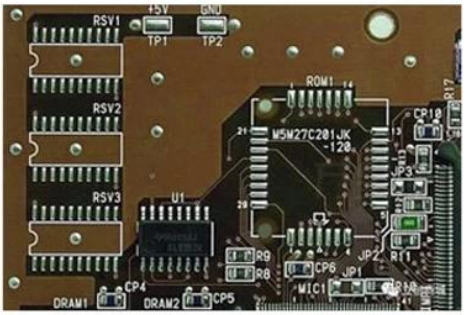

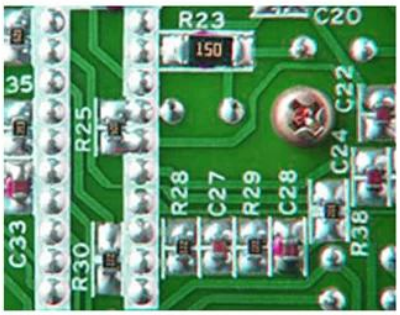

Welding requirements for a wide range of products

TESTING EFFECT

UNIFORM SOLDER JOINT

MEDIUM TEMPERATURE MELTING POINT

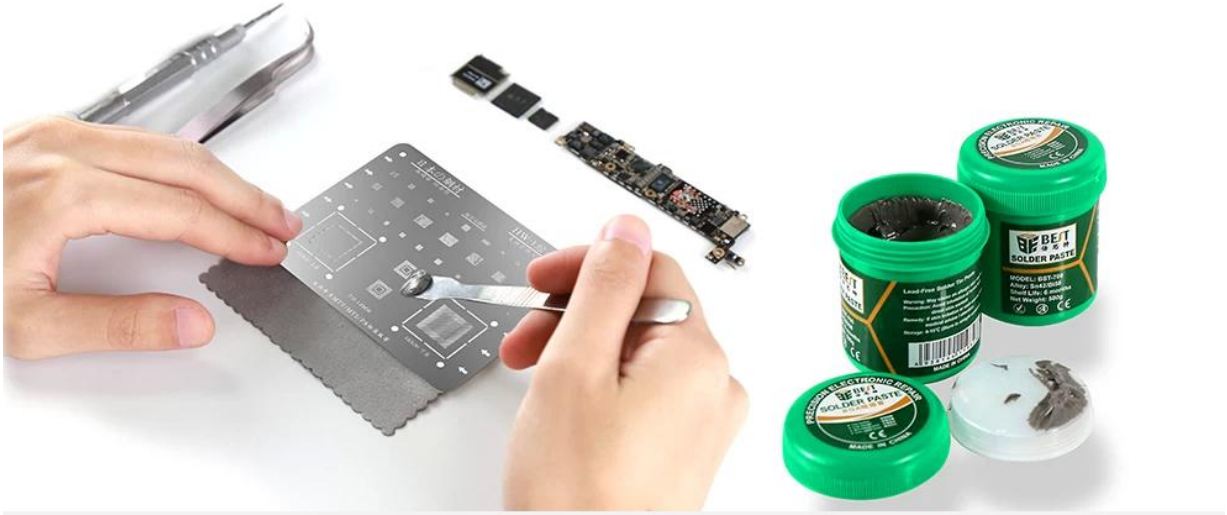

PRODUCT SIZE

63.0MM

75MM

52MM

PRECISION ELECTRONIC REPAIR
BEST
SOLDER PASTE
MADE IN CHINA
MODEL: BST-706
Alloy: Sn42/Bi58
Shelf Life: 6 months
Net Weight: 500g
Lead-Free Solder Tin Paste
MADE IN CHINA