BEST-[illegible]
[illegible]

1.[illegible]

2.[illegible]
3.[illegible]&[illegible]
4.[illegible]&[illegible]
5.[illegible]

6.[illegible]

7.[illegible]
[illegible]

[illegible]BEST[illegible]
[illegible]
[illegible]
[illegible]
[illegible]
[illegible]L * W * Tip[illegible]
110mm[illegible]160mm
[illegible]+[illegible]
[illegible]20[illegible]/[illegible]
[illegible]0.6kg /[illegible]

PRODUCT DISPLAY

PRODUCT SIZE

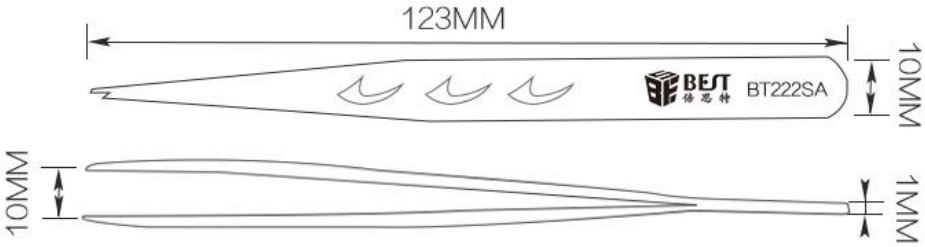

BEST · BT223SA
倍思特

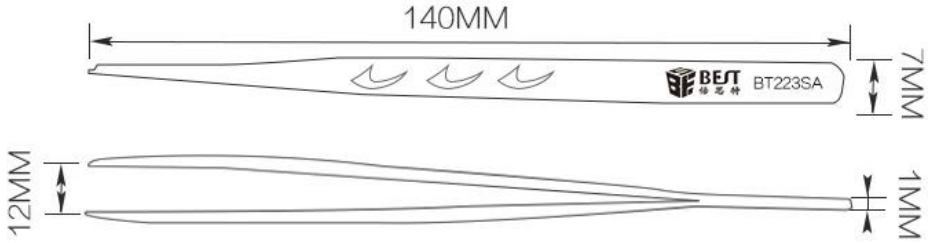
140MM
7MM
BEST 倍思特 BT223SA
12MM
1MM

BEST · BT224SA
倍思特

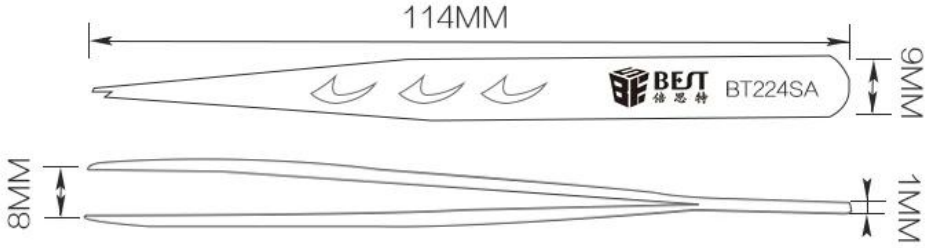
114MM
9MM
BEST 倍思特 BT224SA
8MM
1MM

BEST · BT225SA
倍思特

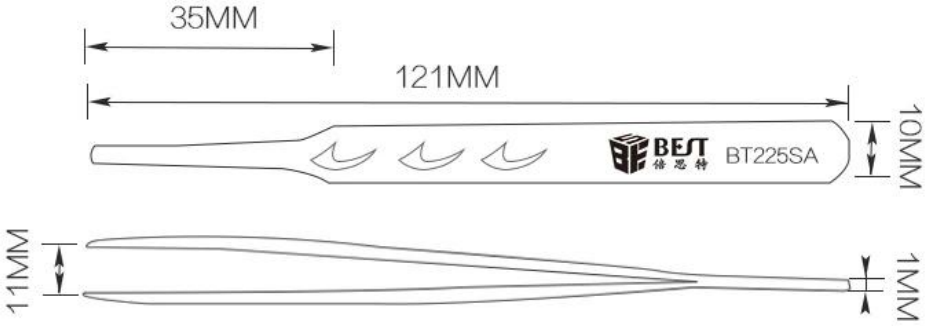
35MM
121MM
10MM
BEST 倍思特 BT225SA
11MM
1MM

BEST · BT226SA
倍思特

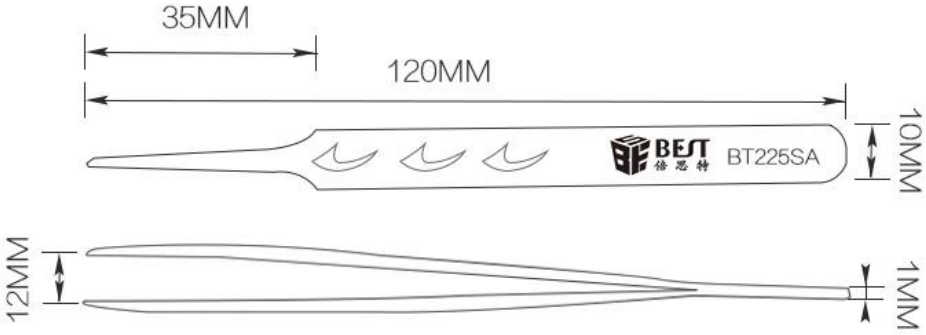
35MM
120MM
10MM
BEST 倍思特 BT225SA
12MM
1MM

PRODUCT DETAILS

BT222SA

BT223SA

BT224SA

BT225SA

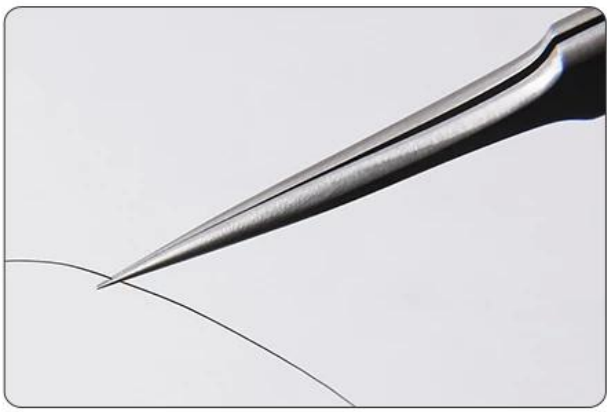

BT226SA

PRODUCT PHOTOGRAPH

PRODUCT PACKAGING