□□□□

BEST-solder□Tin□paste□□□□□□IC□□□□□□□□□

□□□□□BEST□□□□□

□□□□□□

□□□□□□□□□□□□□□□□□/ computer / mobile phone / home Appliances SMD IC□□□BGA IC□□□□□□□□□□□

□□□□□□□□□□□ □□□□□□□□□□□□□□

□□□□□□□

BEST-75

□9□□ / □ □ □ □0□□ / □7.0□

□226-229°C

25-45□/μm

8
9
.
5
±
1
5
1
°
C
5
9
/

SOLDER PASTE
Lead-free High temperature
BEST
倍思特
SOLDER PASTE
MODEL: BST-705
Alloy: Sn99/Ag0.3/Cu0.7
Shelf Life: 6 months
Net Weight: 500g
PRECISION ELECTRONIC REPAIR
BEST
倍思特
SOLDER PASTE
BGA植锡膏
Low residue 低残留物
Cold storage 低温冷藏
Mid-melting point 中温熔点
Even solder joints 焊点均匀
MADE IN CHINA
500g
Low residue / Rapid welding / lead free / Solder spot bright /Ag

Product Usage

MODEL	BST-705
SHELF LIFE	6 months
INGREDIENT	Sn99/Ag0.3/Cu0.7
WEIGHT	500g
MELTING POINT	217℃

Having a large insulation resistance does not corrode the PCB, and the requirements for no-cleaning can be achieved.

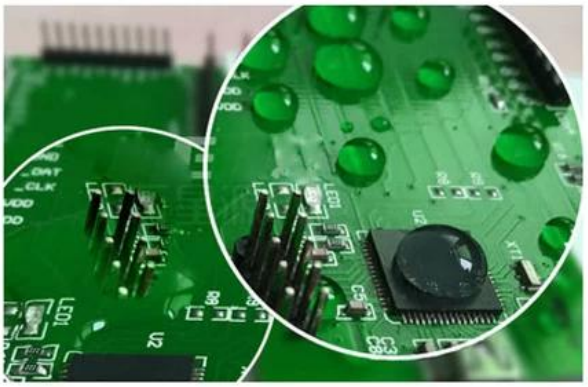

High impedance, full and bright solder, low residue

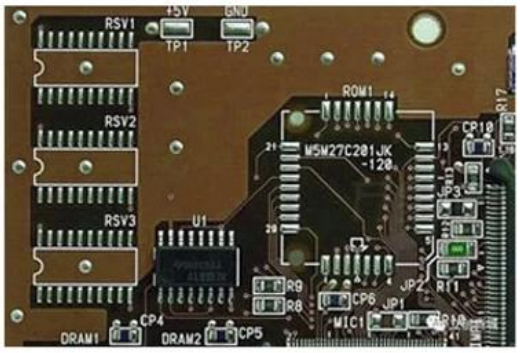

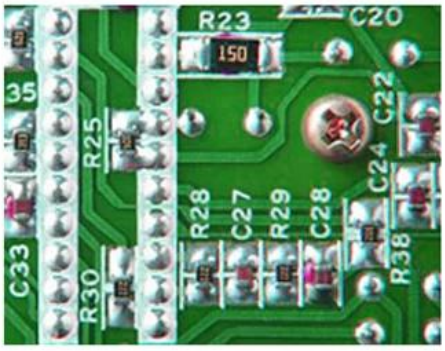

Welding requirements for a wide range of products

TESTING EFFECT

UNIFORM SOLDER JOINT

MEDIUM TEMPERATURE MELTING POINT

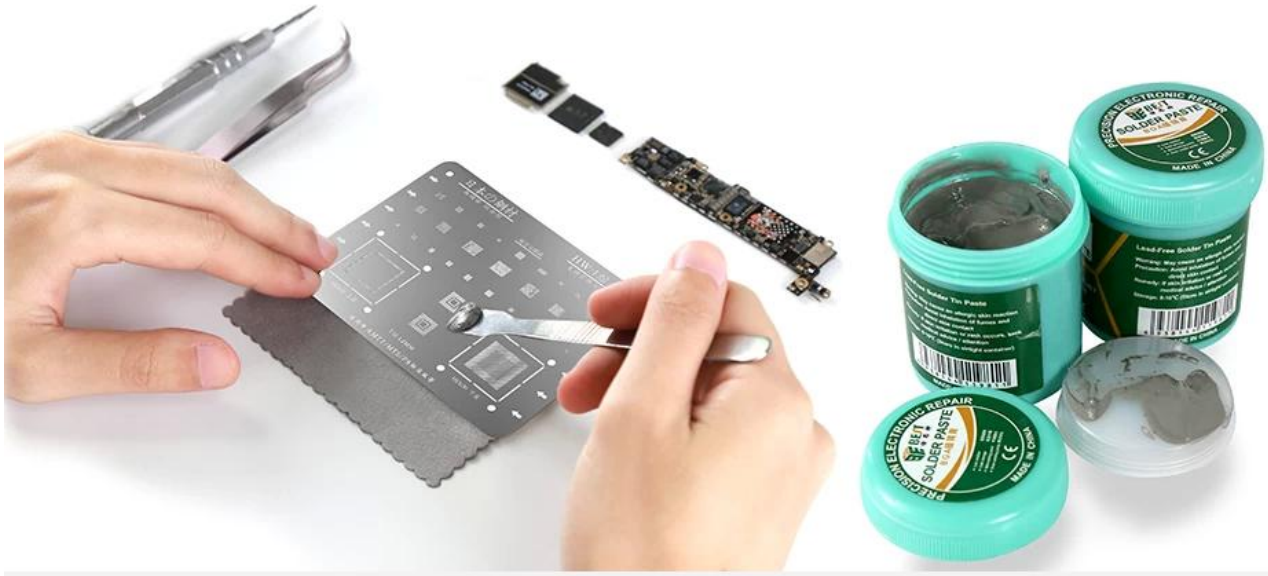

PRODUCT SIZE

63.0MM

75MM

52MM

PRECISION ELECTRONIC REPAIR
SOLDER PASTE
MADE IN CHINA
Lead-Free Solder Tin Paste