PRODUCT DISPLAY

PRODUCT SIZE

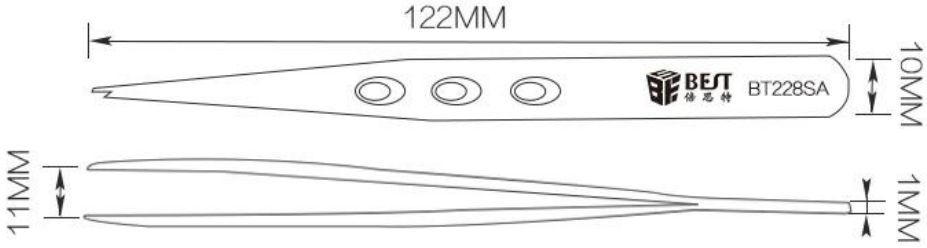

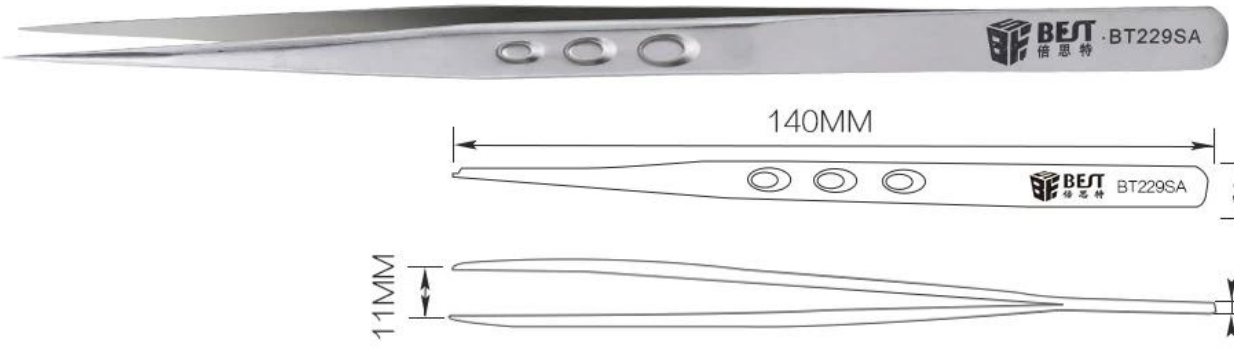
BEST 倍思特 ·BT229SA
140MM
7MM
BEST 倍思特 BT229SA
11MM
1MM

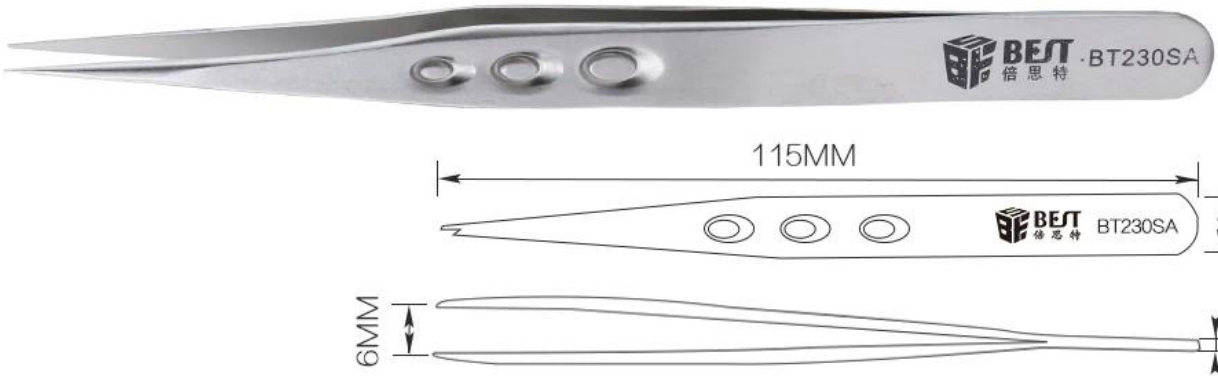
BEST 倍思特 ·BT230SA
115MM
10MM
BEST 倍思特 BT230SA
6MM
1MM

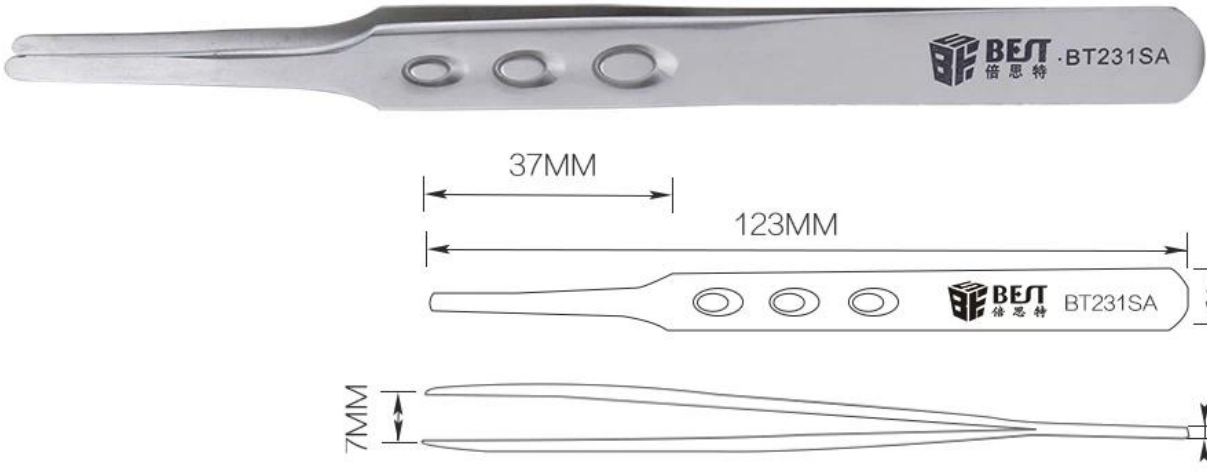
BEST 倍思特 ·BT231SA
37MM
123MM
10MM
BEST 倍思特 BT231SA
7MM
1MM

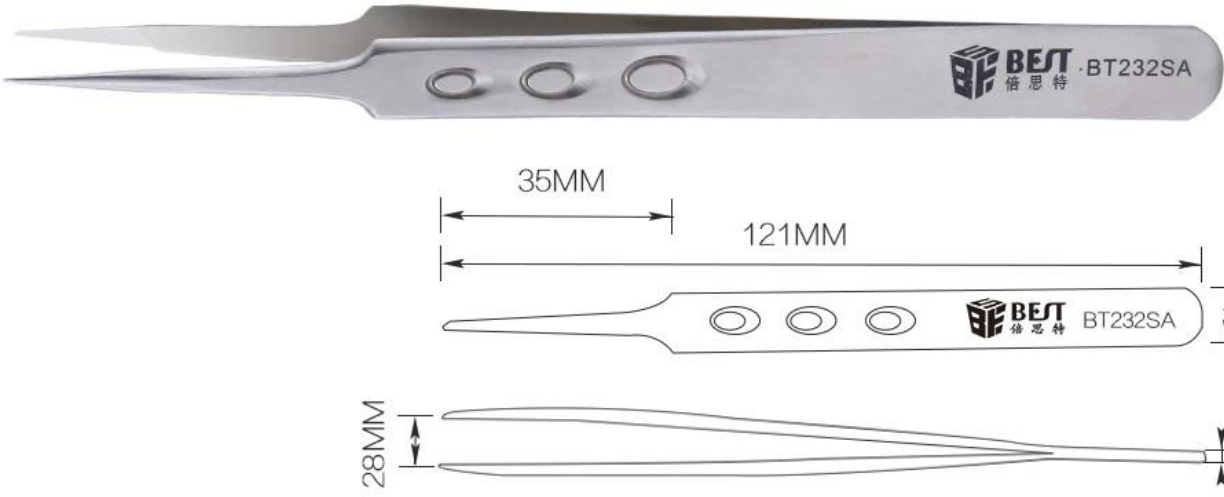
BEST 倍思特 ·BT232SA
35MM
121MM
10MM
BEST 倍思特 BT232SA
28MM
1MM

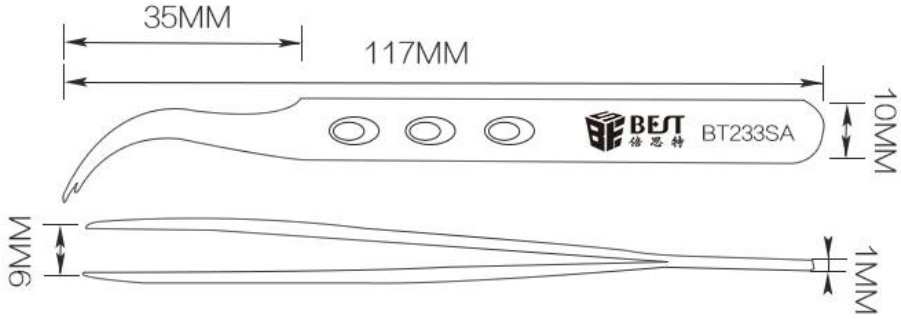

PRODUCT DETAILS

BT228SA

BT229SA

BT230SA

BT231SA

BT232SA

BT233SA

PRODUCT PHOTOGRAPH

PRODUCT PACKAGING