PRODUCT SIZE

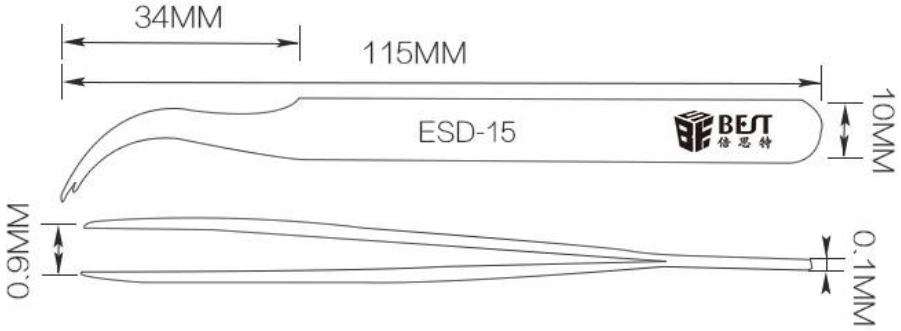

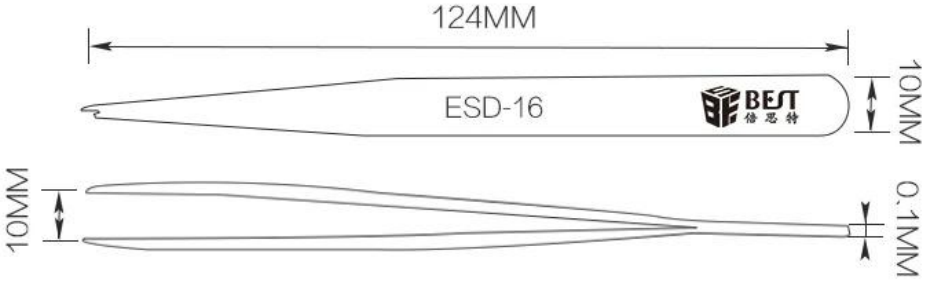

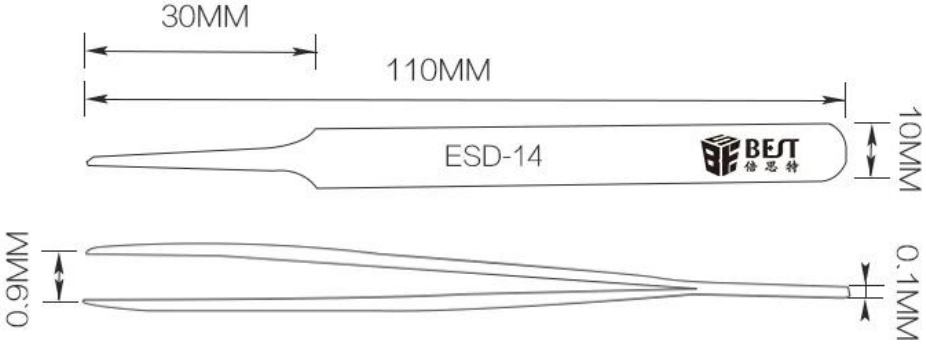

ESD-13
34MM
117MM
ESD-13
10MM
0.9MM
0.1MM

ESD-12
136MM
ESD-12
10MM
10MM
0.1MM

ESD-11
139MM
ESD-11
0.7MM
11MM
0.1MM

ESD-10
108MM
ESD-10
0.8MM
0.8MM
0.1MM

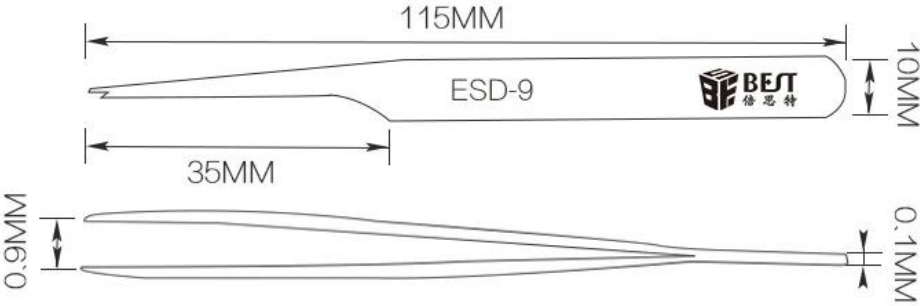

PRODUCT DETAILS

ESD-15

ESD-12

ESD-11

ESD-10

ESD-16

ESD-14

ESD-9

ESD-13
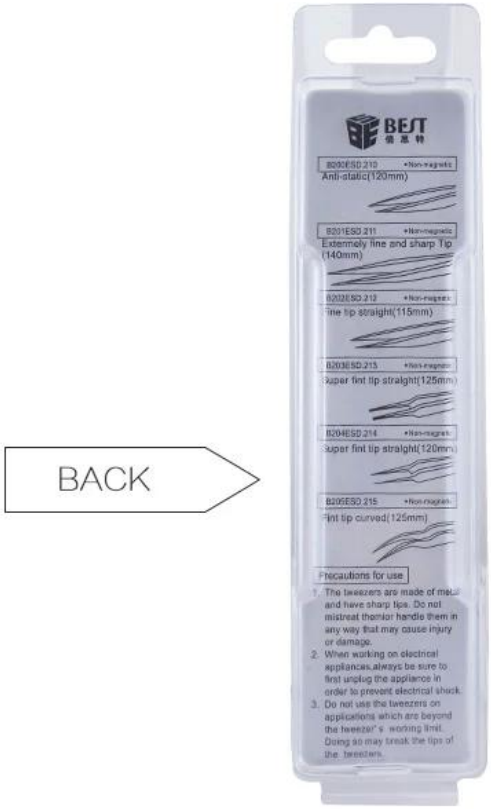
PRODUCT PACKAGING