□□□□□□□□□□□□

□□□□

□□□500°C□
□□□□□□□□IC□□□□□□□□Sevaral□□□□
□□□□□□□□□0~36 cm□□
□□□□□□□□□□□
□□□□□□□□□
□□□□□□□□□□□□□□□□□□□□□□□□□□□□□□□□□□□
□□□□□□□□IC□□□□□□□□Sevaral□□□□
□□□□□□□□□□□□□□□□

PRODUCT DISPLAY

High temperature resistant magnetic groove work pad

Compared

A-300

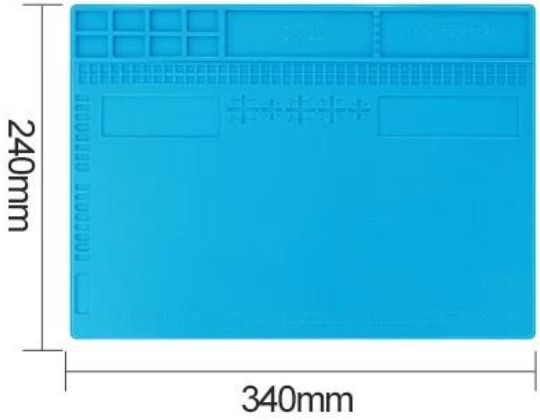

S-140

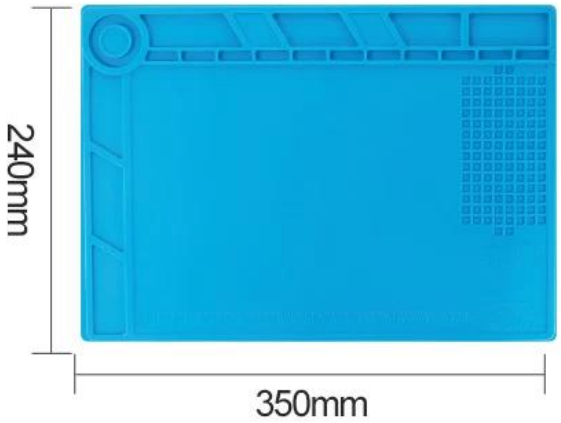

S-130

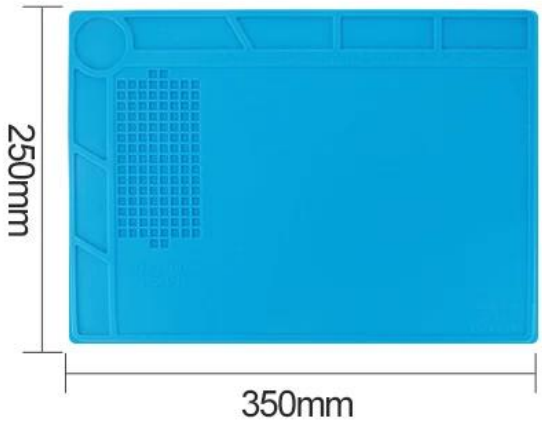

S-120

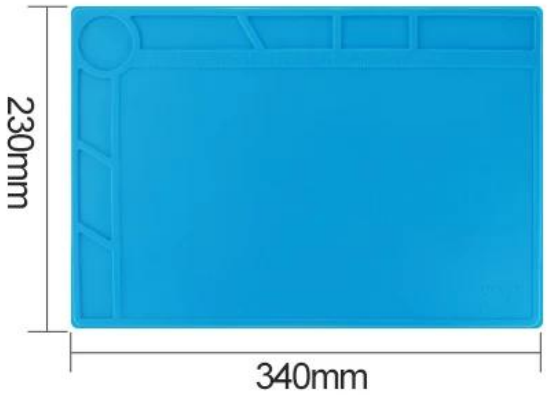

Chip groove， Prevent chip drop loss

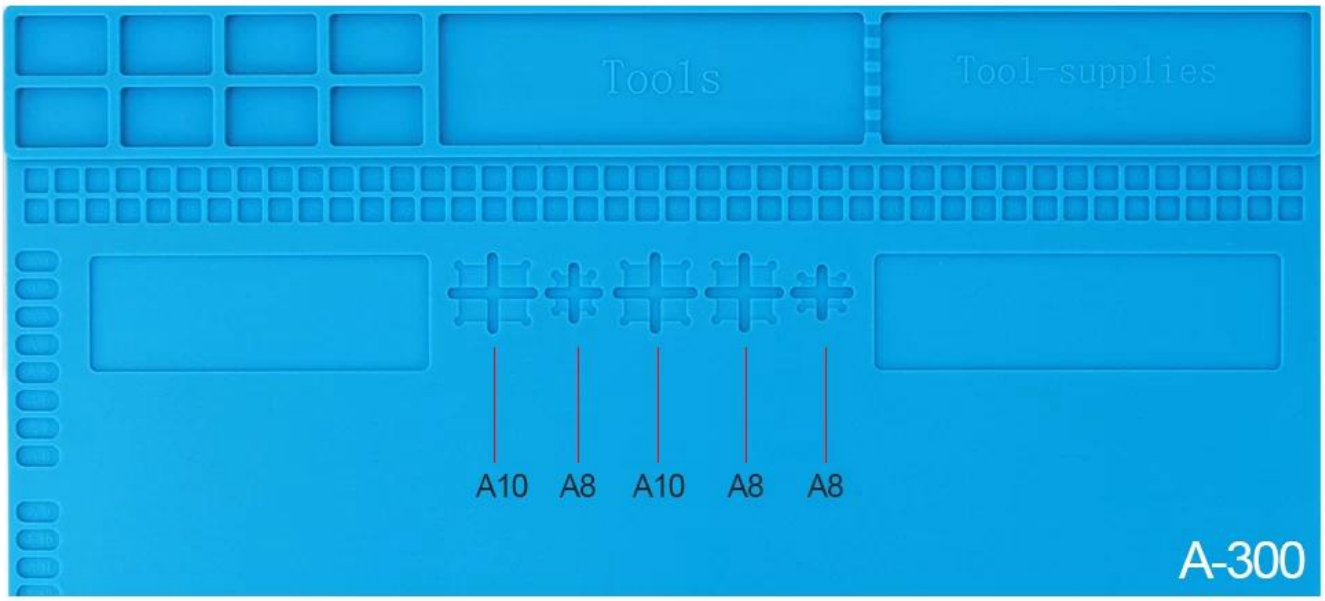

With magnetic, the placement tool is easier and non-slip, avoiding the loss of falling

Screw positioning area

Thicken

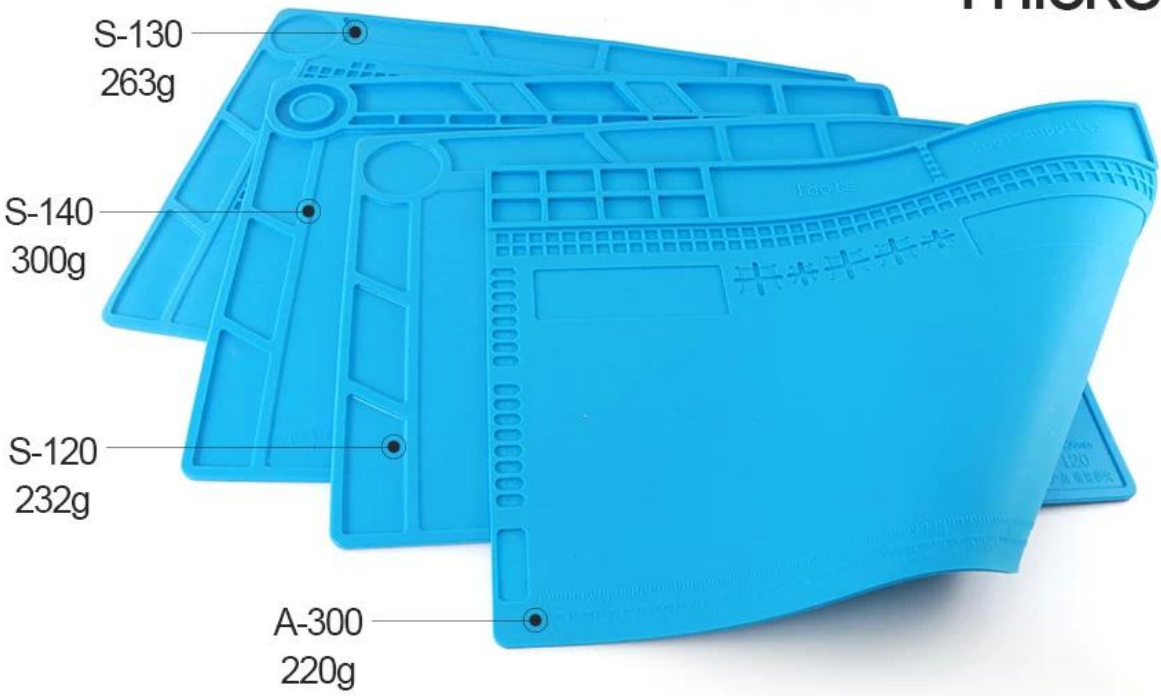

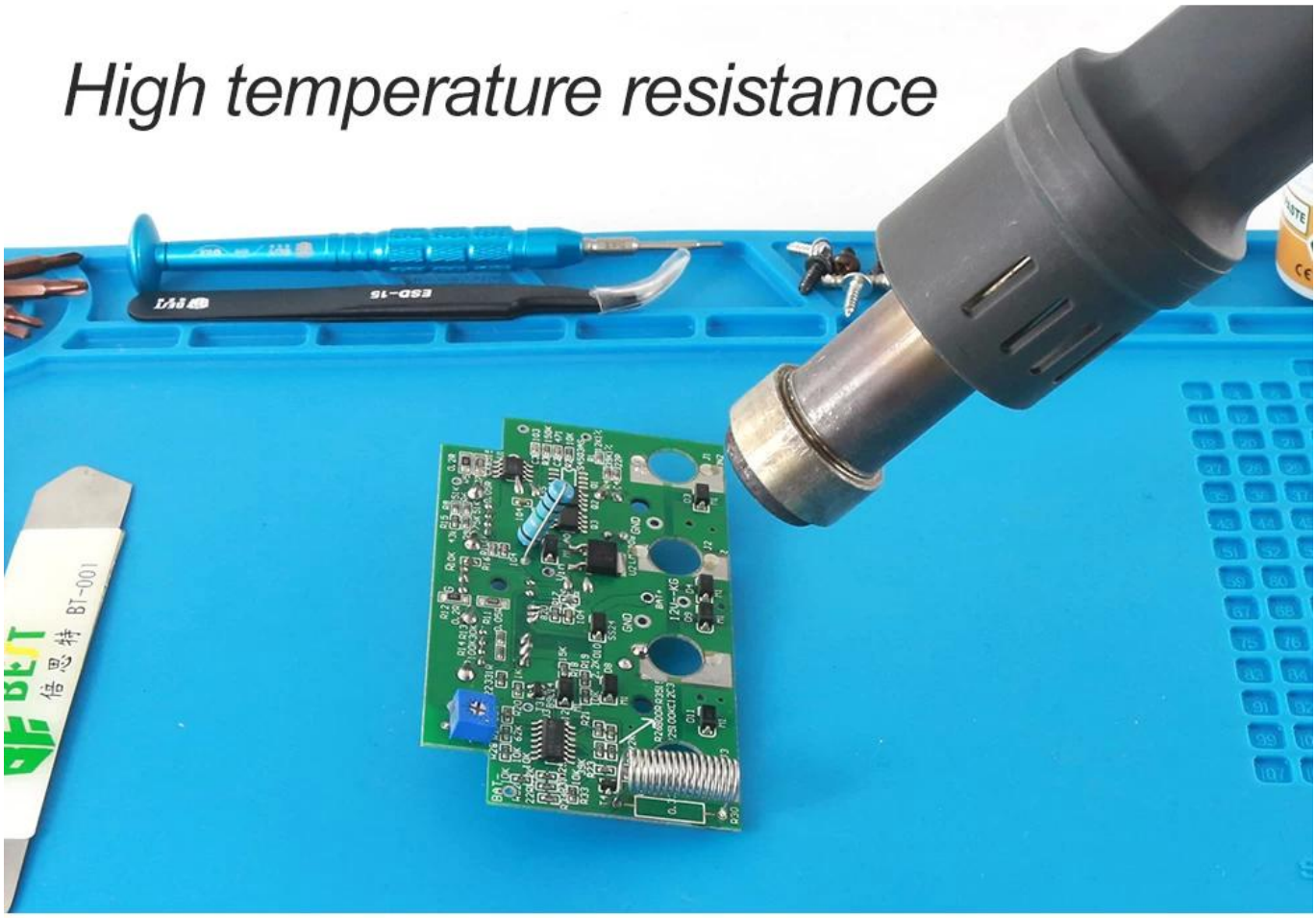
High temperature resistance
ESD-15
BT-001

S-140
BT-001
S-140

S-130

S-120

A-300