□□□□

- 100□□□□□□□□
- □□□□□□□□□□□□□
- □□□□□□□□□□□□□

Product Usage

MODEL	BST-706
SHELF LIFE	6 months
INGREDIENT	Sn42/Bi58
WEIGHT	500g
MELTING POINT	138℃

Having a large insulation resistance does not corrode the PCB, and the requirements for no-cleaning can be achieved.

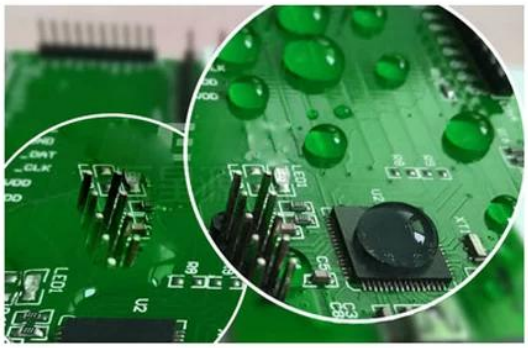

High impedance, full and bright solder, low residue

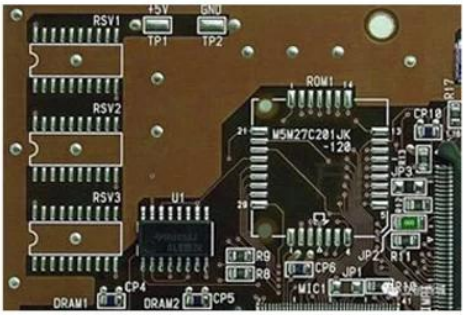

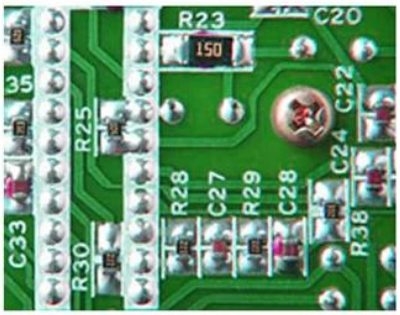

Welding requirements for a wide range of products

TESTING EFFECT

UNIFORM SOLDER JOINT

MEDIUM TEMPERATURE MELTING POINT

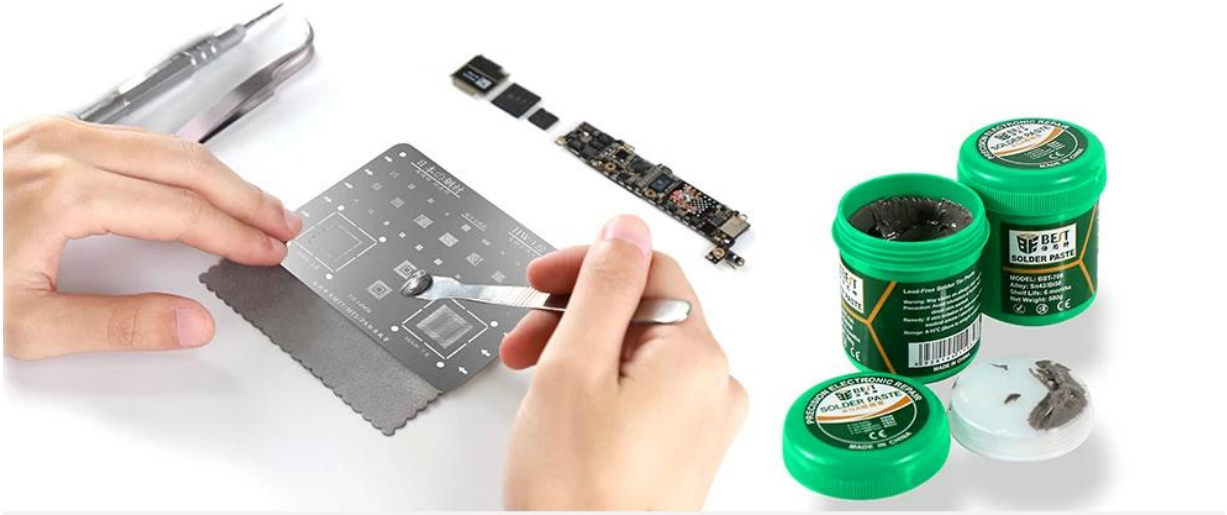

PRODUCT SIZE

63.0MM

75MM

52MM

PRECISION ELECTRONIC REPAIR
BEST
SOLDER PASTE
MADE IN CHINA
MODEL: BST-706
Alloy: Sn42/Bi58
Shelf Life: 6 months
Net Weight: 500g
Lead-Free Solder Tin Paste
MADE IN CHINA