[illegible]

1.[illegible]
2.[illegible]
3.[illegible]
4.[illegible]
[illegible]

[illegible]
[illegible]OEM[illegible]

PRODUCT SIZE

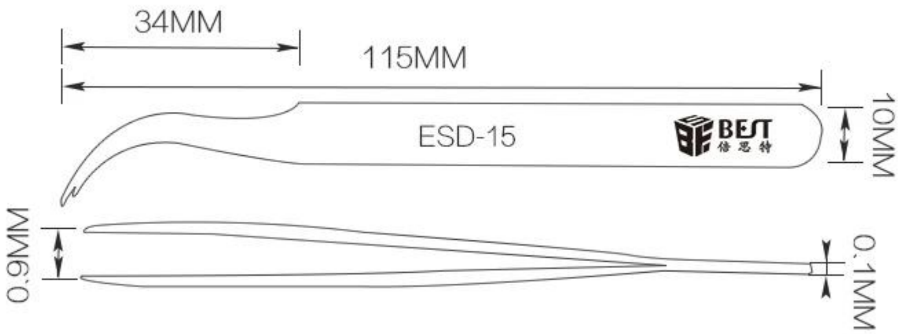

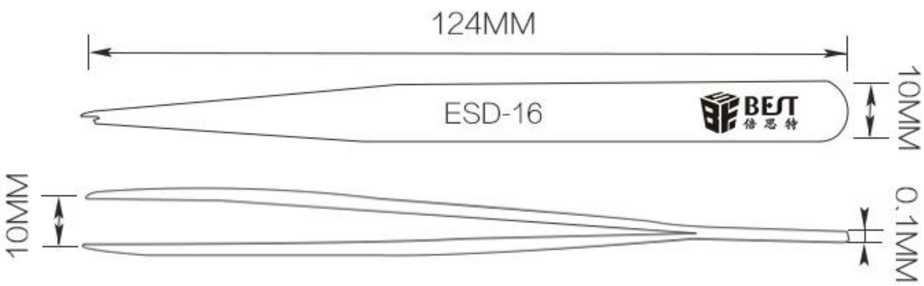

ESD-14
BEST

30MM
110MM
ESD-14
BEST
10MM
0.9MM
0.1MM

ESD-13
BEST

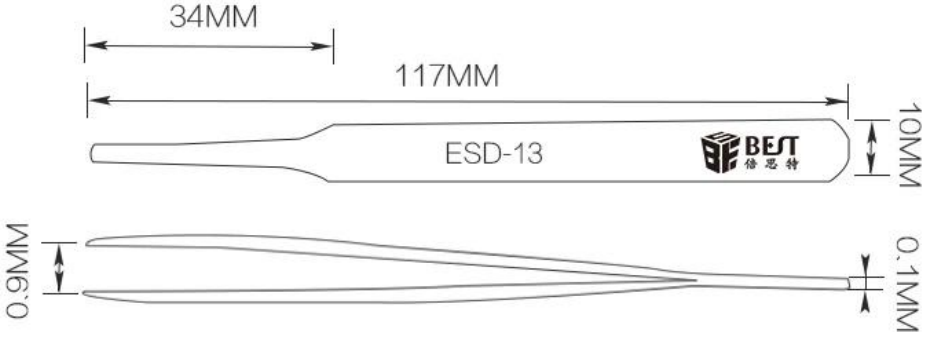
34MM
117MM
ESD-13
BEST
10MM
0.9MM
0.1MM

ESD-12
BEST

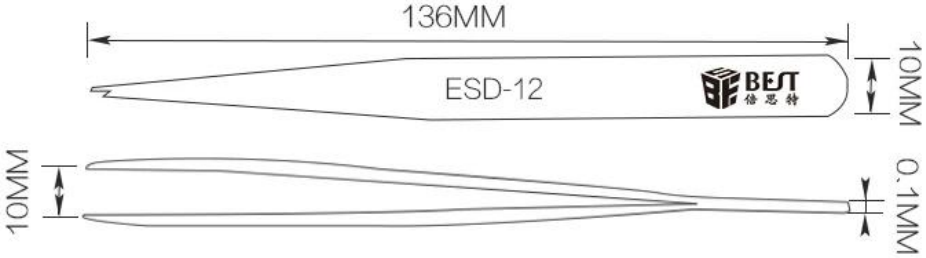
136MM
ESD-12
BEST
10MM
10MM
0.1MM

ESD-11
BEST

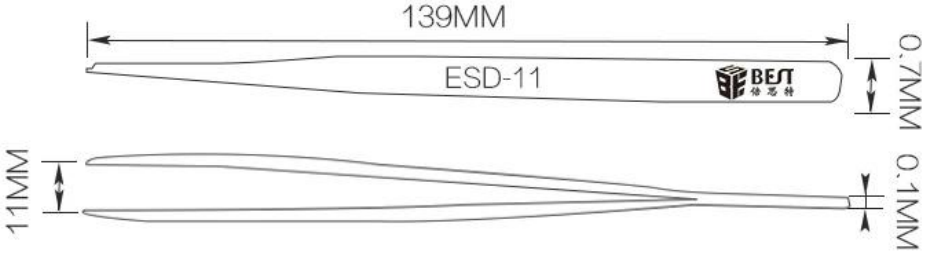
139MM
ESD-11
BEST
0.7MM
11MM
0.1MM

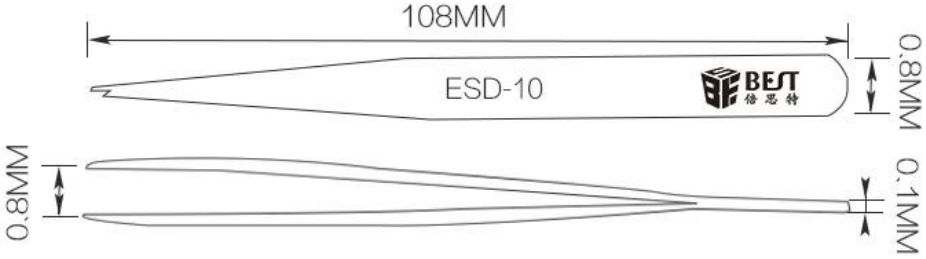

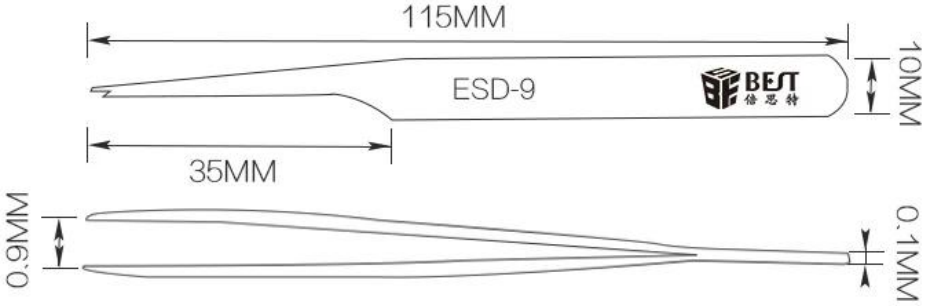

PRODUCT DETAILS

ESD-9

ESD-10

ESD-11

ESD-12

ESD-13

ESD-14

ESD-15

ESD-16

PRODUCT PHOTOGRAPH

PRODUCT PACKAGING