100[illegible]!!
[illegible]
[illegible]
[illegible]
[illegible]PC[illegible]
[illegible]
[illegible]BST-706
[illegible]138℃
[illegible]10cc
[illegible]38g
[illegible]Sn99[illegible]Cu0.7[illegible]Ag0.3[illegible]

PRODUCT USAGE

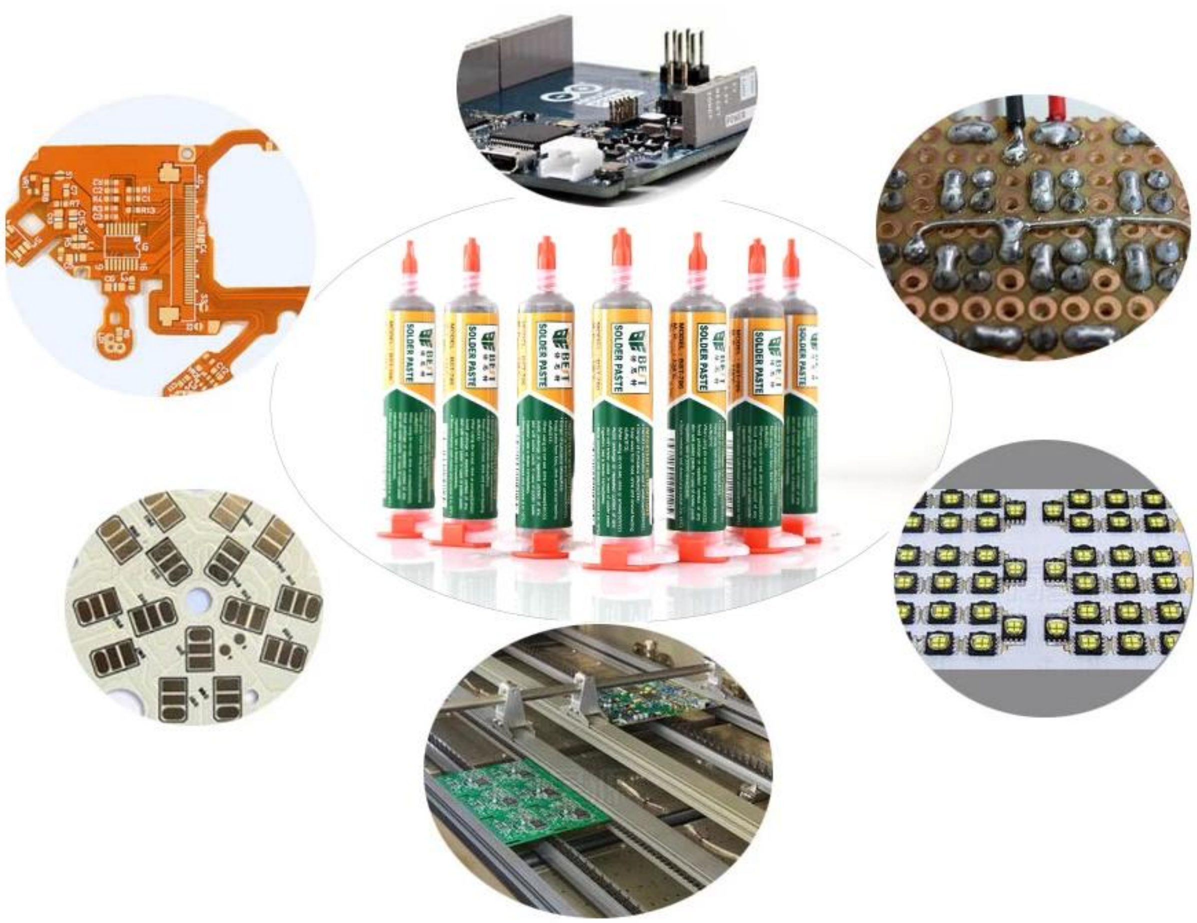

PRODUCT SIZE

M. P. : 138°C
Sn : 99%
Cu : 0.7%
Ag : 0.3%
Volume : 10cc
MADE IN CHINA

Brand: BEST	Model Number:706
Melting point:138℃	Ingredients：Sn99% Cu0.7% Ag0.3%
Volume:10cc	Weight：38g

Having a large insulation resistance does not corrode the PCB, and the requirements for no-cleaning can be achieved.

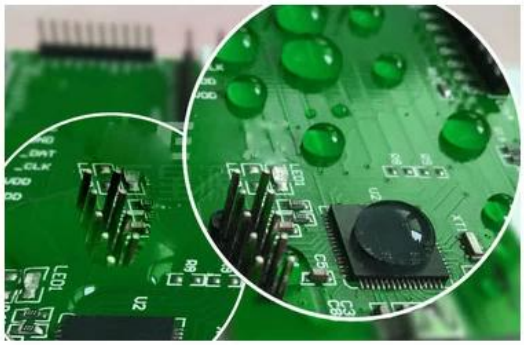

High impedance, full and bright solder, low residue

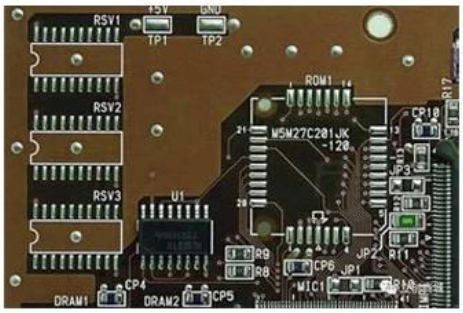

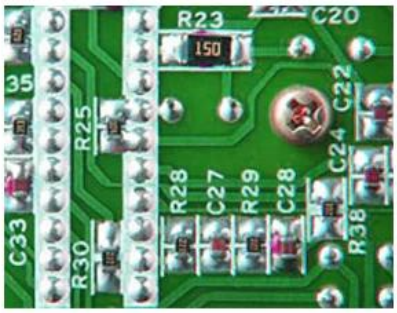

PRODUCT PHOTOGRAPH

SOLDER PASTE
SOLDER PASTE
SOLDER PASTE
SOLDER PASTE
SOLDER PASTE